Instruction Manual

Pharma-X

Table of contents

The information herein is correct at the time of issue but may be subject to change without prior notice

1 Description

1.1 Safety precautions

Installation
- Always read the installation throughly. (See chapter 2 Installation and initial start-up)

Operation
- Always read the operation section throughly (See chapter 3 Operation)

Transportation
- Always ensure that the unit is securely fixed during transportation.

1.2 Recycling information

Packing
- Packing material consist of wood, plastics, metal
- Wood can be reused, recycled or used for energy recovery
- Plastics should be recycled or burnt at a licensed waste incineration plant.
- Metal should be sent for material recycling.

Maintenance
- All metal parts should be sent for material recycling
- All non metal parts must be taken care of in agreement with local regulations

Scrapping
- At end of use, the equipment shall be recycled according to relevant, local regulations. Beside the equipment itself, any hazardous residues from the process liquid must be considered and dealt with in a proper manner. When in doubt, or in the absence of local regulations, please contact the local Alfa Laval sales company.

1.3 Application

The Alfa Laval Pharma-X is a compact point-of-use cooler for Water For Injection (WFI) or Purified Water (PW) systems. The Pharma-X exchanger is intended for points of use where water is drawn intermittently over a period of minutes or, at the most, an hour.

The Pharma-X heat exchanger is mainly used in water systems in the pharmaceutical industry.

A typical duty for the Pharma-X is to cool WFI/water from 80-85°C to 20-40°C.

1.4 Design

The Pharma-X is a tube-in-tube heat exchanger. There are no internal welds and the design eliminates the risk of any contamination between the cooling media and the WFI. It is completely drainable on the product side.

The Pharma-X is supplied either as a naked heat exchanger or as a module. The module is built as a plug-and-play module for easy installation. It is delivered complete with insulation, cladding, valves and a pitot tube arrangement for connection to the WFI main loop.

Tube-in-tube design for optimum thermal efficiency
The Pharma-X heat exchanger is made up of three tubes positioned concentrically within each other. Spirals are used to keep the tubes separated and firmly supported. The tubes are bent as one, through 180 degrees.

The WFI / PW passes through the center annular space, and the cooling or heating medium is passing through the outer and inner channels in a counter current flow.

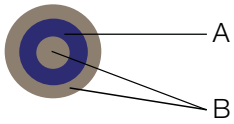

Figure 1.

A = Sanitary side
B = Service side

Stand-by mode
The Pharma-X point-of-use cooler can be regarded as a sub-loop of the main loop.
To maintain optimium sanitary conditions when the point-of-use cooler is in ‘stand-by’ mode, hot water from the main loop enters via a pitot-tube and flows continuously through the point of use cooler and back to the main loop. Fig 2.

Cooling mode
Switching to ‘cooling mode’ enables cold water to be withdrawn with no flushing or draining of the system required. Cold WFI is available within seconds, thanks to the Pharma-X’s low hold up volume, and high thermal efficiency. Fig. 3.
It is also possible to withdraw hot WFI at the point of use.

1 Description

Hygienic design
All product wetted parts in the Pharma-X are electropolished and the tubes are seamless.

No risk of cross-contamination
There are no internal welds in the Pharma-X, eliminating the risk of cross contamination between the product and the service medium.

Drainable
The Pharma-X is fully drainable on the product side, with no dead legs.

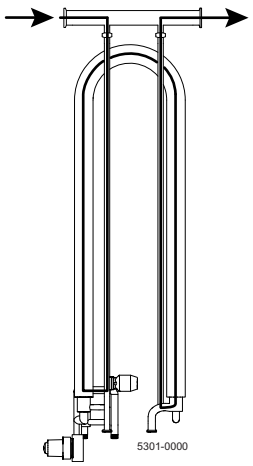

Figure 2. Stand-by mode

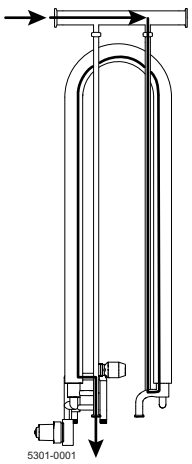

Figure 3. Cooling mode

2 Installation and initial start-up

2.1 Introduction

The Pharma-X is delivered as a naked unit, Fig 4, or as an insulated module, Fig. 5.

A Pharma-X module consists of the tube-in-tube heat exchanger, insulation, cladding, valves and a pitot tube arrangement. The valves are either manual or automatic.

2.2 Installation recommendations

Do not install the heat exchanger under conditions that exceed those specified in chapter 5 Technical data.

- Naked unit, connect product and service medium as shown in Fig. 4. Both outlet connection on service medium side shall be used
- Pharma-X Module, connect the pitot tube to the main loop, service medium and instrument air to the module, Fig.6. Recommended pressure for the instrument air is 5 bar.
  Note: Both outlet connections on service medium side shall be used.
- A counter-current flow through the heat exchanger gives the most efficient heat transfer and also the possibility to have crossing temperature programs.
- It is recommended that the sanitary side always have a higher pressure than the service side. Therefore it is not recommended to install a manual valve or shut-off valve on the service medium outlet.
- If the Pharma-X heat exchanger is installed at a low point, it can be used as a draining point of water system.
- If the heat exchanger is to be installed in a close loop system, non-return valves and appropriate safety valves should be fitted on the service side after the cooling water valve.
- To ensure it is drainable, it is recommended to install the Pharma-X heat exchanger in a vertical position. If installed in a horizontal position the Pharma-X is no longer drainable.

Important
The Pharma-X module is installed directly on the wall. Read the drawings and check the distance from the wall, to make sure that the pitot tube is in line with the main pipe of the water system.

Figure 4. Pharma-X naked unit

Figure 5. Pharma-X complete module

A = Product outlet
B = Service medium inlet
C = Service medium outlet
D = Product inlet.

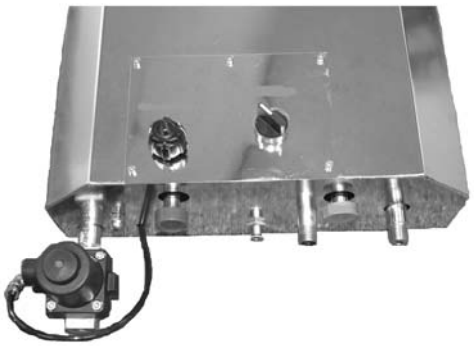

Figure 6. Instrument air connection

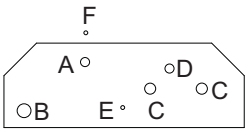

Single
TT311 & TT3151

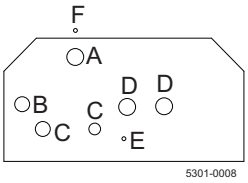

Double
TT312 & TT3152

A = Point of use
B = Cooling water inlet
C = Cooling water outlet
D = Drain (WFI)
E = Instrument air inlet
F = Instrument air inlet (if pneumatic PoU-valve)

2.3 The pitot tube arrangement

In stand by mode, hot water from the main loop enters via the pitot tube, Fig. 7, and flows continuously through the point-of-use cooler and back to the main loop.

The pitot tube can be turned 180 degrees if needed.

The arrow should always point in the direction of the flow in the main line/ WFI line. Fig. 8.

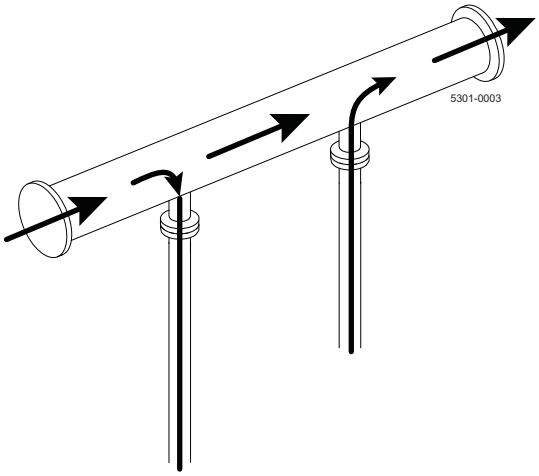

Figure 7. Pitot tube connected to sanitary ring main.

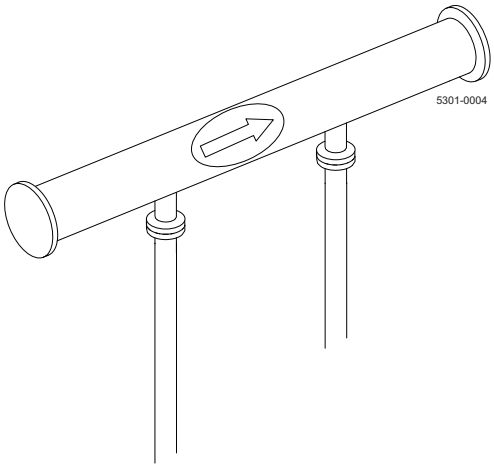

Figure 8. An arrow on the pitot tube shows the direction of the flow in the main line/WHI line

2.4 Initial start-up procedure

When taking a heat exchanger into operation, slowly start to circulate the cold medium only. Make sure that the entire cold side of the heat exchanger is completely flooded before closing the vents.

The hot medium should then be gradually introduced until all passages are filled with hot fluid.

Check that the liquid in the sanitary side has a higher pressure than the liquid in the service side.

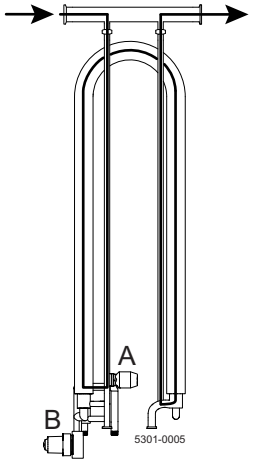

Figure 9.

A = Open B = Close

Stand-by mode
The pitot tube ensures that the product is kept circulating in the point-of-use cooler, keeping it sanitized.

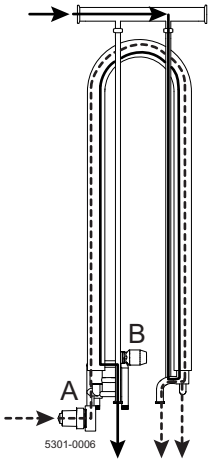

Figure 10.

A = Open B = Close

Cooling mode
The cooling water valve opens. The recirculation valve is closed. Cold water is available with seconds.

3.1 Initial start-up

See the directions given in chapter 2.4 Initial start-up procedure.

3.2 Normal operation

The operation directions below imply that the heat exchanger has been equipped with a pitot tube, see description in chapter 2.3 The pitot tube arrangement.

3.3 Stand-by mode

When the heat exchanger is in stand-by mode the N/O recirculation valve is open. To maintain optimium sanitary conditions when the point-of-use cooler is in 'stand-by' mode, hot water from the main loop enters via a pitot-tube and flows continuously through the point of use cooler and back to the main loop.

A sufficient flow is maintained in the Pharma-X by means of the pitot tube in the main loop, as long as the flow rate in the main loop is maintained.

3.4 Cooling mode

To switch to cooling mode, turn the rotary switch from stand-by mode to cooling mode.

Cold WFI / PW
In 'cooling mode' the N/O recirculation valve is closed and the N/C cooling water valve is open.

When Cold WFI / PW is needed: Turn the air switch and open the point-of-use valve.

Hot WFI / PW
When hot WFI / PW is needed: Open the point of use valve in 'stand-by' mode.

3.5 Shut down

Shut down procedure
If the system is to be completely shut down for a long period of time:
Drain all fluids from the heat exchanger. Remaining fluids on the inside may cause corrosion. Water must be drained from tubes where there is a possibility of freezing.

4 Maintenance

4.1 Introduction

Since the heat exchanger is not visually inspectable it is recommended that it be used for clean duties only.

4.2 Cleaning of the service side

Provide convenient means for frequently cleaning of the heat exchanger as suggested below:

1. Circulate chloride free cleaning solution through the service side at good velocity to remove sludge or other soft deposits.
2. Some soft deposits may be removed by circulating hot fresh water through the service side.

4.3 Steam-In-Place (SIP)

Steam-In-Place process for the Pharma-X has to be done manually.

When applying steam on the product side of the heat exchanger in a steam-in-place process, steam traps must be installed at the user point and drain points.

To avoid pressure build up above design conditions, it is very important that the service side (cooling medium side) is equipped with suitable safety valves or burst discs.

Before starting the SIP operation, the cooling medium to the Pharma-X should be shut off, the Pharma-X module should be in stand-by mode and both the product side and the service side should be drained.

When the SIP operation is completed, condensate is removed from the lowest drain points of the system. Make sure the product side of the Pharma-X is drained properly. Close the user point and drain points of the Pharma-X. Allow the system to cool.

4.4 Gaskets

It is recommended that when a heat exchanger is disconnected, it should be reconnected using new gaskets.

5.1 Introduction

The Pharma-X heat exchanger is available in six standard models with a length of 1.0 alternatively 1.5 meters, which gives an effective total tube length of 2, 3, 4 or 6 meters depending on model. The heat exchangers are configured as single pass or double pass.

TT 311, TT 3151, TT 312, TT3152

The denomination indicates the configuration
- The first figure indicates the type (3 tubes)
- The middle figure(s) indicates the length, 1 or 1.5 metres
- The last figure indicates the number of passes, 1 or 2

Air switch
- Bosch Rexroth

Gemü valves
- 601 (handwheel operated valve)
- 650, N/O (remote controlled valve)
- 615, N/C (remote controlled valve)

Connections
- Sanitary side:
  Tri-clamp, either with metric or ANSI dimensions
- Service side:
  Naked unit: BSP threaded pipe (3/8")
  Module: Standard is 1/2" (F) for inlet and 2 outlets at 3/8" (M), BSP threaded.Available upon request is also NPT threaded.
  BSP threaded pipe (3/8") Standard is 1/2" (F) for inlet and 2 outlets at 3/8" (M), BSP threaded. Available upon request is also NPT threaded

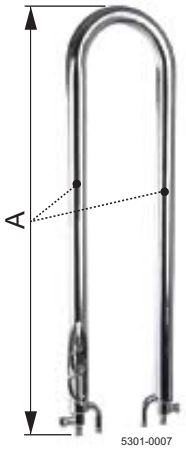

Figure 11.

A = 1 meter

Example
Length 1 meter x 2 = total tube length 2 meters

Type	Lenght (m)	Heat transfer area (m^2)	Maximum product flow (l/h)
TT 311	1	0.3	1,500
TT 3151	1.5	0.5	1,000
TT 312	1	0.6	900
TT3152	1.5	1.0	700

5 Technical data

Technical data	
Max flow rate	1500 l/h
Heat transfer area	0.3-1.0 m^2
Connections	Tri-clamps metric or ANSI
Material	316 L stainless steel, seamless tubes
Surface finish	Ra< 0.5 µm. Electropolished on all product wetted parts
Welding according to	EN 287 and ASME IX
Pharma-X module	Insulation: Armaflex Cladding: 304L electropolished
Weight of module	22-46 kg
Design pressure	10 bar g*
Design temperature	150 ºC

Pressure vessel code: N/A

* Manual PoU valve. With Pneumatic PoU valve design pressure 6 bar g.

5.2 Spare parts list

- Gasket for 14 mm clamp connection
- Gasket for 12.7 mm clamp connection
- Gasket for 18 mm clamp connection
- Gasket for 19.05 mm clamp connection
- Clamp band
- Membrane for diaphragm valves 650 and 601, Gemü
- Membrane for diaphragm valve 615, Gemü
- User point valve Gemü 601 (Manual)
- User point valve Gemü 650 NC
- Recirculation valve Gemü 650 NO
- Cooling water valve Gemü 615 Brass
- Cooling water valve Gemü 615 Stainless steel
- Air hose 6x1mm, Eaton hydraulics
- Air switch, Bosch Rexroth
- Silicone bushing